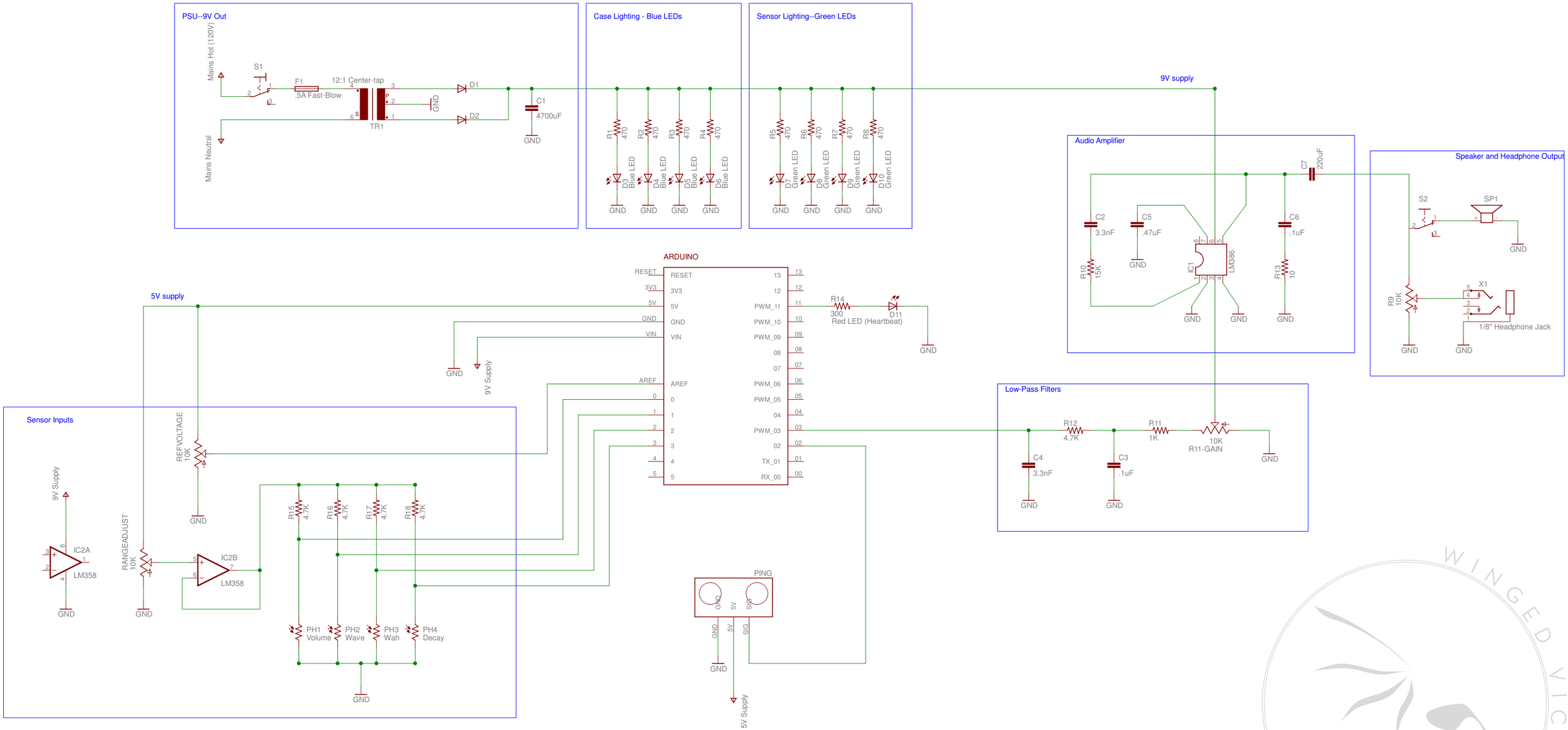

WINGED VICTORY DESIGN